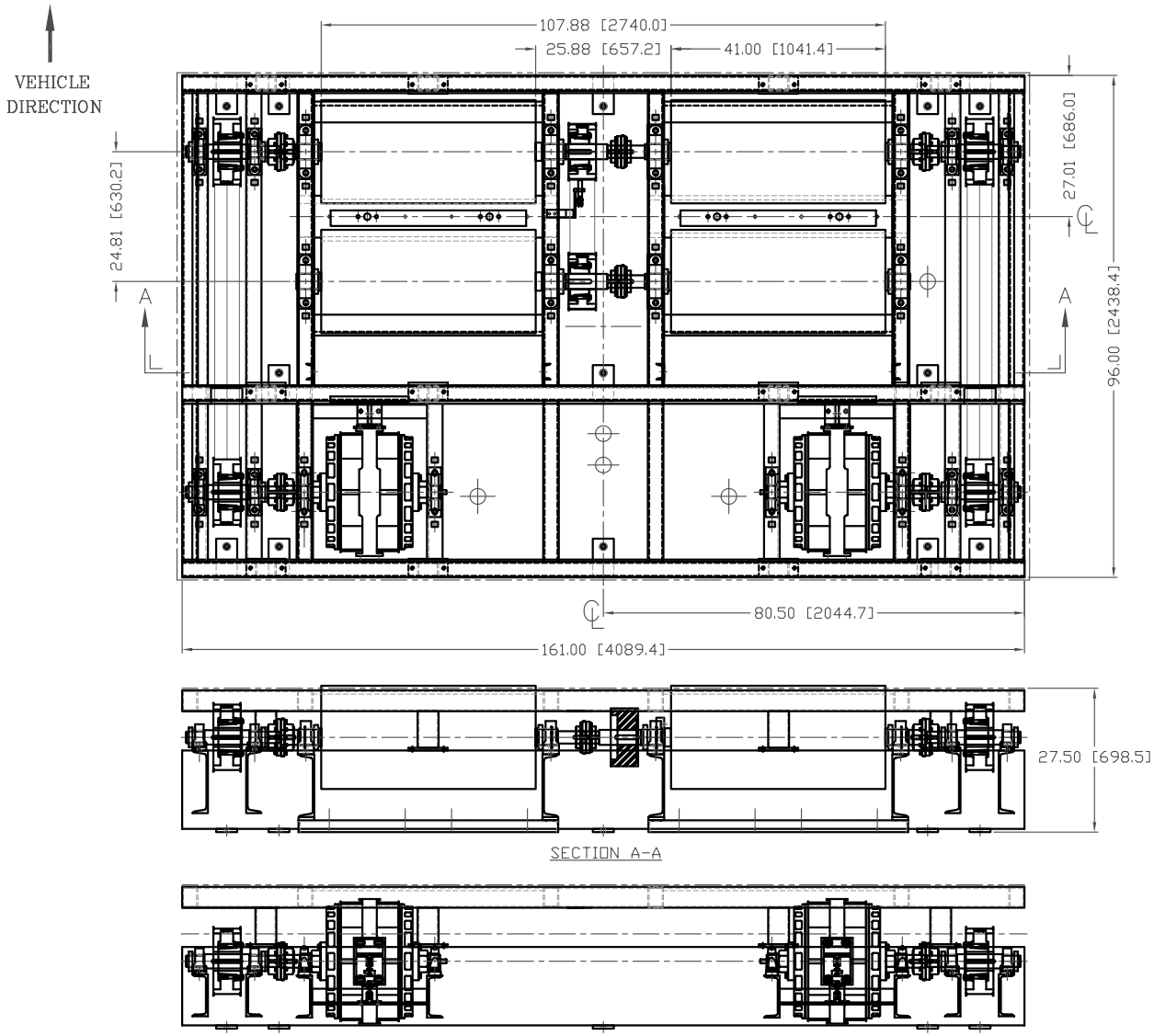

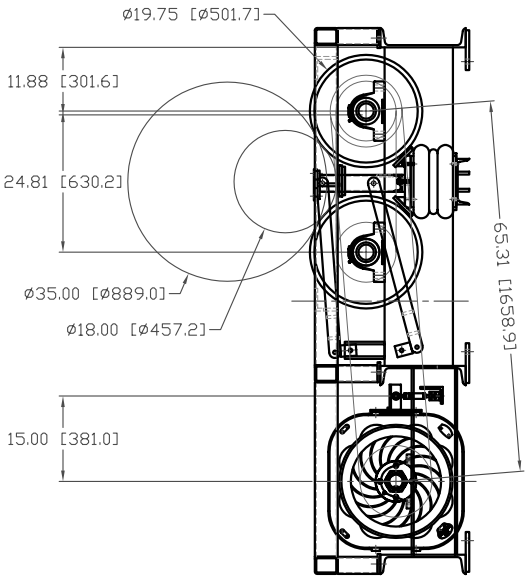

CUSTOMER APPROVAL: _____
DATE: _____

REV	ECN	REVISION	BY	DATE
A	1015	RELEASE	TEM	31OCT03

THIS DOCUMENT IS THE PROPERTY OF MUSTANG DYNAMOMETER AND IS DELIVERED ON THE EXPRESS CONDITION THAT IT IS NOT TO BE DISCLOSED, REPRODUCED IN WHOLE OR IN PART, OR USED FOR MANUFACTURE FOR ANYONE OTHER THAN MUSTANG DYNAMOMETER WITHOUT ITS' WRITTEN CONSENT, AND THAT NO RIGHT IS GRANTED TO DISCLOSE OR DO USE ANY INFORMATION CONTAINED IN SAID DOCUMENT.
THIS RESTRICTION DOES NOT LIMIT THE RIGHT TO USE INFORMATION OBTAINED FROM ANOTHER SOURCE.

REF 20015328

NOTES:
1. TWO K400 POWER ABSORBERS.
2. ALL DIMENSIONS ARE REFERENCE ONLY.

MUSTANG DYNAMOMETER
2800 PINNACLE PKWY., TWINSBURG, OH 44087
TELEPHONE: (330)963-6400 FAX: (330)425-3810

DO NOT SCALE DRAWING	TITLE: CONCEPTUAL MD-750-2K400-FF				
TOL: BASIC [BSC] BASIC DIMENSIONS: .XX ± .01[.25] .XXX ± .005[.127] FAB. DIMENSIONS: .XX ± .05[1.25] .XXX ± .005[.127] ANGULAR ±1°	DRAWN: TEM	DATE: 31OCT03	APP.: TM	DATE: 31OCT03	SCALE: 1:10.7	UNITS: IN[MM]
	SIZE: D	DWG. NO. 20028106			SH 1 OF 1	REV. A